RoHS

THIS IS A RoHS COMPLIANT COMPONENT/ PRODUCT.

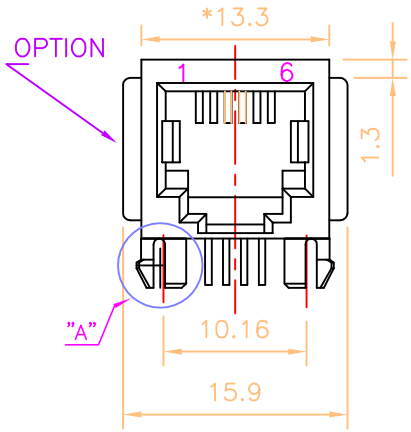

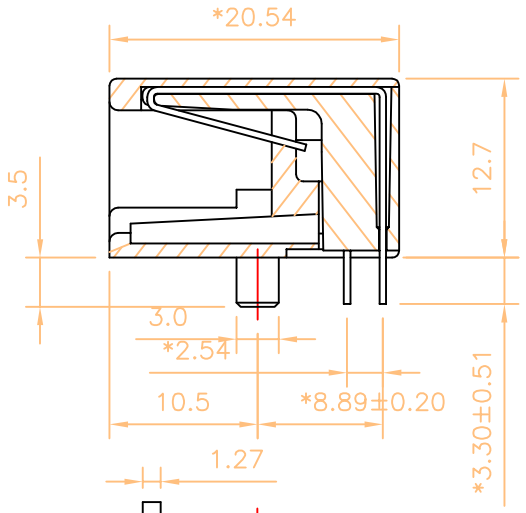

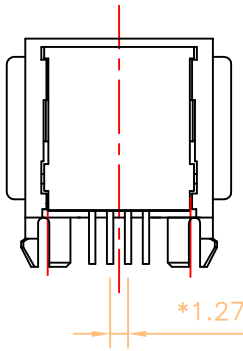

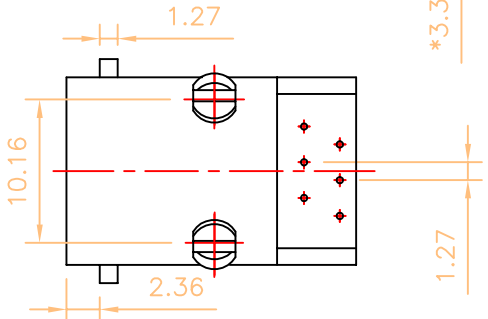

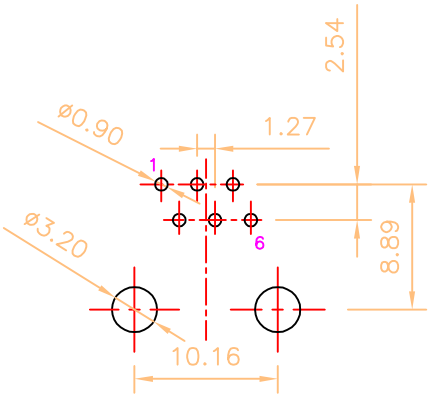

PC Board Layout
Component Side Shown

NOTES:

ELECTRICAL:
1. VOLTAGE RATING: 125 VAC.
2. CURRENT RATING: 1.5 AMP.
3. CONTACT RESISTANCE: 20 MILLIOHMS MAX.
4. INSULATION RESISTANCE: 1000 MEGOHMS MIN. @ 500 VDC.
5. DIELECTRIC STRENGTH: 1000 VAC 60Hz, 1MIN.

MECHANICAL:
1. HOUSING MATERIAL: : CLASS FILLED POLYESTER UL94V-0.
2. CONTACT MATERIAL : PHOSPHOR BRONZE ø0.46mm
3. PLATING : GOLD PLATING OVER NICKEL.
4. OPERATING LIFE: 750 CYCLES MIN.
5. PCB RETENTION PRE-SOLDER: 1 LB MIN.
6. PCB RETENTION POST-SOLDER: 10 LBS MIN.

ENVIRONMENTAL:
1. STORAGE: -40°C TO +85°C.
2. OPERATION: -40°C TO +85°C.

MATES WITH MODULAR PLUG CONFORMING TO FCC PART 68, SUBPART F.

PART NUMBER: N391X-072-XX

1-3u" 2-6u"
3-15u" 4-30u"
5-50u"

01-6P4C POLYESTER W/O PANEL STOP
02-6P6C POLYESTER W/O PANEL STOP
03-6P2C POLYESTER W/O PANEL STOP

MARK	ECN-NO.	REVISION RECORD	DRAWN	DATE
X0	0000000	NEW DESIGN	BOB	011409

Contact Technology Co., Ltd.

UNLESS OTHERWISE SPECIFIED TOLERANCE

Dimension Range	Tolerance
X.X	±0.20
X.XX	±0.15
X.XXX	±0.10
ANGLE	±5°

SCALE 1/1 | UNIT mm | SIZE A3 | SHEET 1/1

CHECKED | APPROVED

Material/Plated/Notes: SEE NOTE

NAME: 1X1 SIDE ENTRY JACK 6P UTP 20.57

Tooling No.

PART NO. SEE NOTE | REV. 0

DOC. NO. NN390A072

Design drawing