RoHS

THIS IS A RoHS COMPLIANT COMPONENT/ PRODUCT.

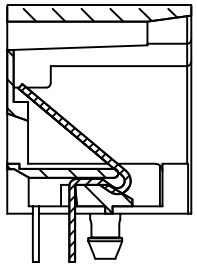

SECTION B–B

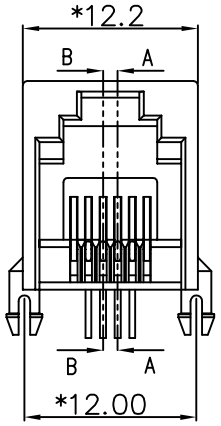

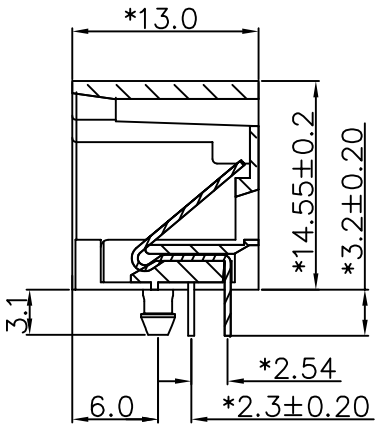

SECTION A–A

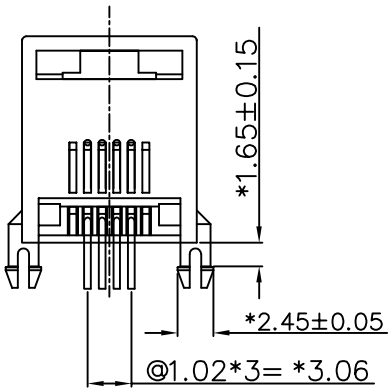

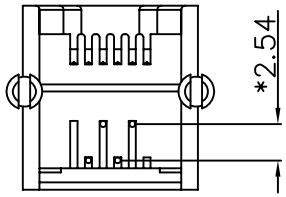

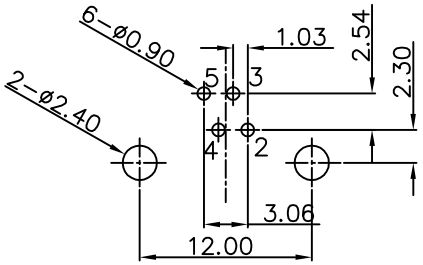

PCB Layout Component Side Shown

NOTES:

ELECTRICAL:

1. VOLTAGE RATING : 125 VAC.
2. CURRENT RATING : 1.5 AMP.
3. CONTACT RESISTANCE: 30 MILLIOHMS.
4. INSULATION RESISTANCE: 1000 MEGOHMS MIN. @ 500 VDC.
5. DIELECTRIC STRENGTH 1000 VAC 60Hz, 1MIN.

MECHANICAL:

1. HOUSING MATERIAL : GLASS FILLED POLYESTER OR HIGH TEMP. UL94V–0.
2. CONTACT MATERIAL : PHOSPHOR BRONZE WIRE CONTACTS
3. PLATING : GOLD PLATING OVER NICKEL.
4. OPERATING LIFE : 750 CYCLES MIN.
5. PCB RETENTION PRE–SOLDER : 1 LB MIN.
6. PCB RETENTION POST–SOLDER: 10 LBS MIN.

ENVIRONMENTAL:

1. STORAGE : –40°C TO +85°C.
2. OPERATION: –40°C TO +85°C.

MATES WITH MODULAR PLUG CONFORMING TO TIA–1096–A.

PART NUMBER: N351X–047–XX

B–0.5u" 1–3u"
3–15u" 4–30u"
5–50u" 7–1u"

01– POLYESTER 6P2C GY.(COOL GRAY 6C).
02– POLYESTER 6P4C BK.
03– POLYESTER 6P4C GREEN(3405U)
04– POLYESTER 6P2C COOL GRAY(3U)
05– POLYESTER 6P4C GY.(COOL GRAY 6C).
06– HIGH TEMP. 6P4C BK.
07– POLYESTER 6P2C GREEN.

MARK	ECN-NO.	REVISION RECORD	DRAWN	DATE
⚠X0	0000000	NEW DESIGN	DORIS	070715'

Contact Technology Co., Ltd.

UNLESS OTHERWISE SPECIFIED TOLERANCE		SCALE	CHECKED
Dimension Range	Tolerance	1/1	
X.X	±0.20	UNIT mm	APPROVED
X.XX	±0.15		
X.XXX	±0.10	SIZE A3	SHEET 1/1
ANGLE	±5°		

Material/Plated/Notes: SEE NOTE

NAME: MINI L/P PCB JACK 6P ROUND PIN

Tooling No.:

PART NO.: SEE NOTE

REV.: A

DOC. NO.: NN350A047

Design drawing