RoHS

THIS IS A RoHS COMPLIANT COMPONENT/ PRODUCT.

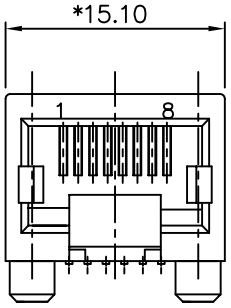

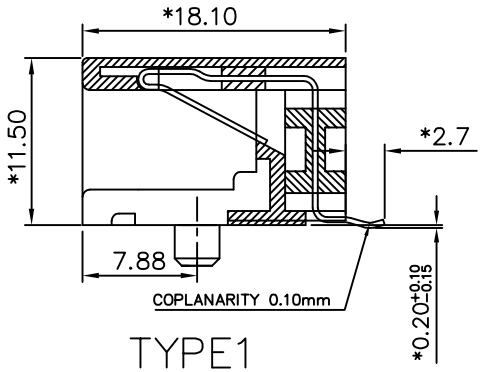

TYPE1

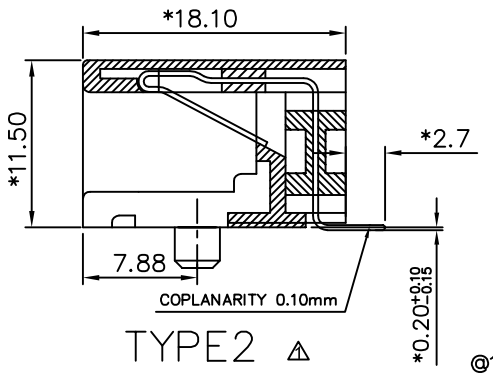

TYPE2 ⚠

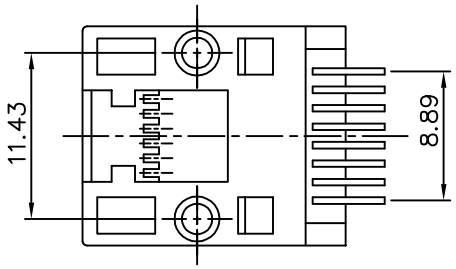

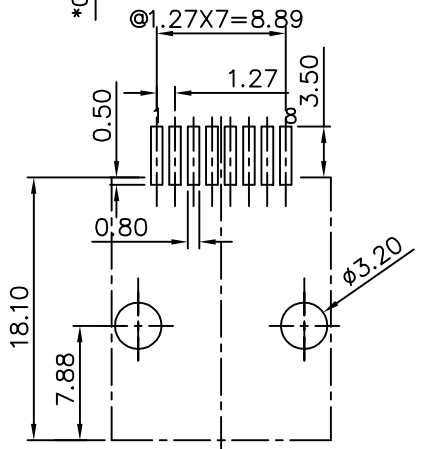

PC BOARD LAYOUT COMPONENT SIDE SHOWN

NOTES:

ELECTRICAL:
1. VOLTAGE RATING : 125 VAC.
2. CURRENT RATING : 1.5 AMP.
3. CONTACT RESISTANCE : 35 MILLIOHMS MAX.
4. INSULATION RESISTANCE: 1000 MEGOHMS MIN @ 500 VDC.
5. DIELECTRIC STRENGTH : 1000 VAC 60Hz, 1MIN.

MECHANICAL:
1. HOUSING MATERIAL : HIGHT TEMP UL94V-0 BK.
2. CONTACT MATERIAL : PHOSPHOR BRONZE t=0.35mm.
3. PLATING : GOLD PLATING OVER NICKEL.
4. OPERATING LIFE : 750 CYCLES MIN.
5. PCB RETENTION POST-SOLDER: 10 LBS MIN.

ENVIRONMENTAL:
1. STORAGE : -40℃ TO +85℃.
2. OPERATION: -40℃ TO +85℃.

MATES WITH MODULAR PLUG CONFORMING TO FCC PART 68, SUBPART F.

PART NUMBER: N331X-043-01

1-3u" 2-6u" 3-15u" 4-30u" 5-50u"

01-8P8C BK.TYPE1
02-8P8C BK.TYPE2 ⚠

⚠ X2		增加平脚料号	SOULE	101519
⚠ X0	0000000	NEW DESIGN	YANG	080609
MARK	ECN-NO.	REVISION RECORD	DRAWN	DATE

Contact Technology Co., Ltd.

UNLESS OTHERWISE SPECIFIED TOLERANCE		SCALE	CHECKED
Dimension Range	Tolerance	2.5/1	
X.X	±0.20	UNIT mm	APPROVED
X.XX	±0.15		
X.XXX	±0.10	SIZE A3	SHEET 1/1
ANGLE	±5°		

Material/Plated/Notes: SEE NOTE

NAME: SIDE ENTRY 8P8C SMT JACK

Tooling No.

PART NO. SEE NOTE

REV. 1

DOC. NO. NN330A043

Design drawing