RoHS

THIS IS A RoHS COMPLIANT COMPONENT/ PRODUCT.

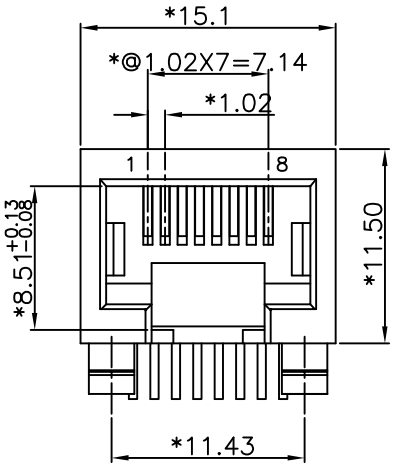

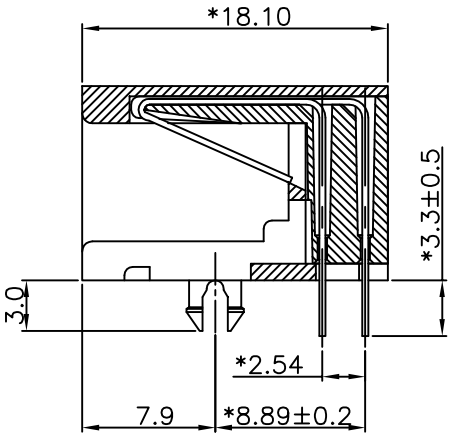

SECTION A–A

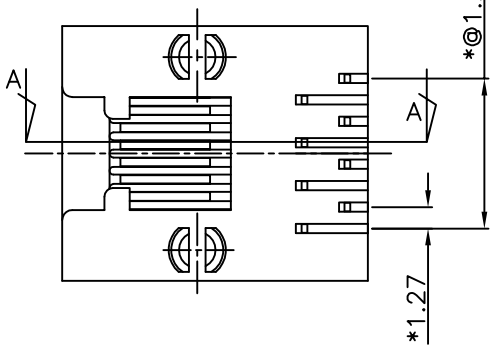

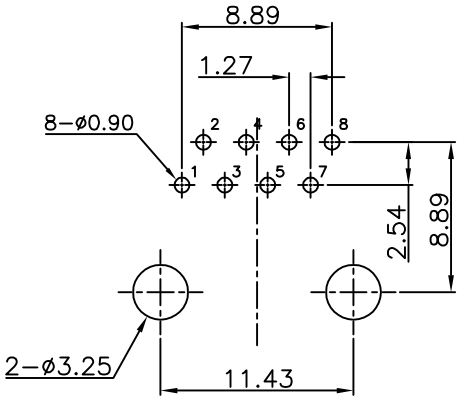

PC BOARD LAYOUT
COMPONENT SIDE SHOWN

ELECTRICAL:

1. VOLTAGE RATING : 125 VAC.
2. CURRENT RATING : 1.5 AMP.
3. CONTACT RESISTANCE : 35 MILLIOHMS MAX.
4. INSULATION RESISTANCE : 1000 MEGOHMS MIN. @ 500 VDC.
5. DIELECTRIC STRENGTH : 1000 VAC 60Hz, 1MIN.

MECHANICAL:

1. HOUSING MATERIAL : GLASS FILLED POLYESTER OR HIGH TEMP. UL94V–0.
2. CONTACT MATERIAL : PHOSPHOR BRONZE t=0.35mm.
3. PLATING : GOLD PLATING OVER NICKEL.
4. OPERATING LIFE : 750 CYCLES MIN.
5. PCB RETENTION PRE–SOLDER : 1 LB MIN.
6. PCB RETENTION POST–SOLDER : 10 LBS MIN.

ENVIRONMENTAL:

1. STORAGE : −40°C TO +85°C.
2. OPERATION : −40°C TO +85°C.

MATES WITH MODULAR PLUG CONFORMING TO TIA–1096–A.

PART NUMBER : N331X–001–XX

X: 1–3u" 2–6u" 3–15u" 4–30u" 5–50u"

XX:
- 01–POLYESTER BK
- 02–HIGH TEMP. BK
- B 03–8P4C HIGH TEMP. BK
- C 04–POLYESTER YL
- C 05–POLYESTER GREEN
- D 06–HIGH TEMP. YL
- E 07–POLYESTER BL(285C)

MARK	ECN-NO.	REVISION RECORD	DRAWN	DATE
E X1		ADD NEW P/N	HENRY	072717'
D X1		ADD NEW P/N(3)	Ethan	121912
C X2		ADD NEW P/N(3)	YANG	120408
B X1		ADD NEW P/N(3)	YANG	042508
A X0	0000000	NEW DESIGN	Linger	081706

Contact Technology Co., Ltd.

UNLESS OTHERWISE SPECIFIED TOLERANCE

Dimension Range	Tolerance
X.X	±0.20
X.XX	±0.15
X.XXX	±0.10
ANGLE	±1°

SCALE 3/1 | UNIT mm | SIZE A3 | SHEET 1/1 | CHECKED | APPROVED

Material/Plated/Notes: SEE NOTE

NAME: 11.5 SIDE ENTRY 10P8C DIP TYPE

Tooling No.

PART NO. SEE NOTE

DOC. NO. NN330A001

REV. E

Design drawing