RoHS

THIS IS A RoHS COMPLIANT COMPONENT/ PRODUCT.

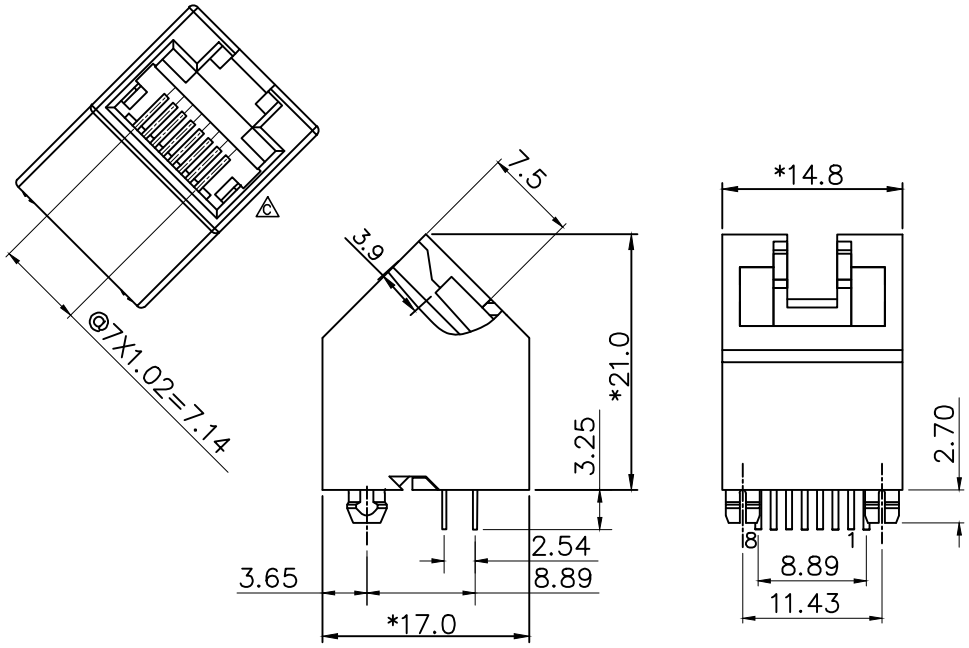


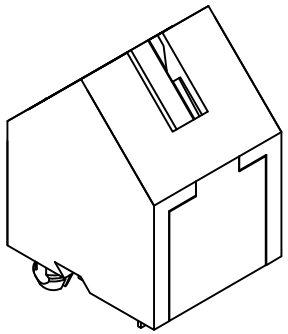

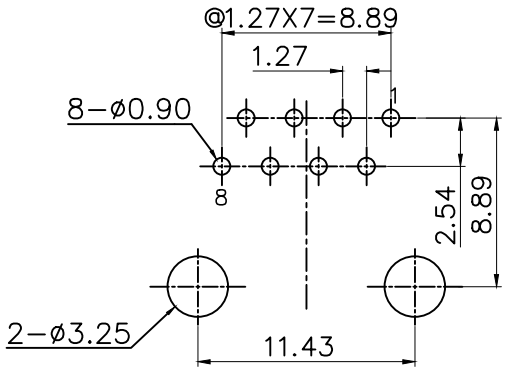


PC Board Layout
Component Side Shown

NOTES:

ELECTRICAL:

1. VOLTAGE RATING : 125 VAC .
2. CURRENT RATING : 1.5 AMP .
3. CONTACT RESISTANCE : 35 MILLIOHMS MAX.
4. INSULATION RESISTANCE : 1000 MEGOHMS MIN. @ 500 VDC.
5. DIELECTRIC STRENGTH : 1000 VAC 60Hz, 1MIN.

MECHANICAL:

1. HOUSING & IN'S MATERIAL : GLASS FILLED POLYESTER OR HIGH TEMP. UL94V−0.
2. CONTACT MATERIAL : PHOSPHOR BRONZ t=0.35 mm.
3. PLATING : GOLD PLATING OVER NICKEL.
4. OPERATING LIFE : 750 CYCLES MIN.
5. PCB RETENTION PRE−SOLDER : 1 LB MIN.
6. PCB RETENTION POST−SOLDER : 10 LBS MIN.

ENVIRONMENTAL:

1. STORAGE : −40°C TO +85°C.
2. OPERATION : −40°C TO +85°C.

MATES WITH MODULAR PLUG CONFORMING TO TIA−1096−A.

PART NUMBER : N311X−058−XX

1−3U" 2−6u" 3−15u"
4−30U" 5−50u"

01−POLYESTER. 8P8C WHITE.
02−POLYESTER. 8P8C BK.
△B 03−HIGH TEMP. 8P8C BK.

| MARK | ECN-NO. | REVISION RECORD | DRAWN | DATE |
|---|---|---|---|---|
| △C X1 | | DRAWING CORRECTION | Roger | 052814' |
| △B X1 | | ADD NEW P/N. | KARL | 103113' |
| △A X0 | 0000000 | NEW DESIGN | YANG | 063009' |

Contact Technology Co., Ltd.

| UNLESS OTHERWISE SPECIFIED TOLERANCE | | SCALE | 2.5/1 | CHECKED | |
|---|---|---|---|---|---|
| Dimension Range | Tolerance | | | | |
| X.X | ±0.20 | UNIT | mm | APPROVED | |
| X.XX | ±0.15 | | | | |
| X.XXX | ±0.10 | SIZE | A3 | SHEET | 1/1 |
| ANGLE | ±5° | | | | |

Material/Plated/Notes: SEE NOTE

NAME: 45° PCB JACK 8P

Tooling No.:

PART NO.: SEE NOTE

REV.: C

DOC. NO.: NN310A058

Design drawing