RoHS ✓ THIS IS A RoHS COMPLIANT COMPONENT/ PRODUCT.

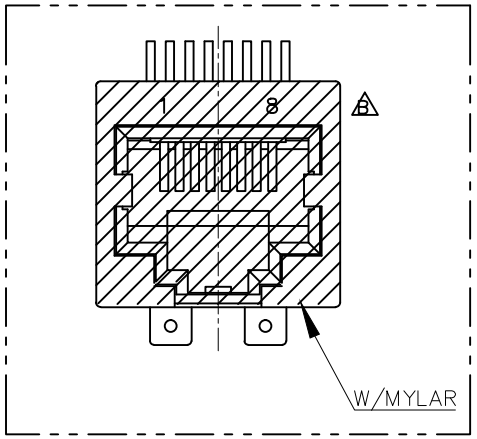

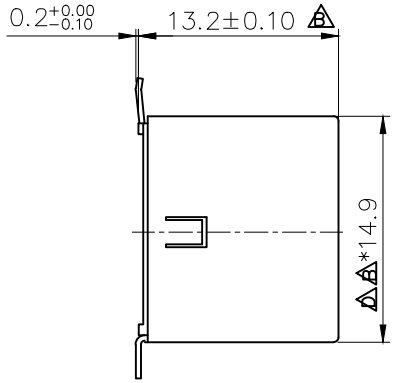

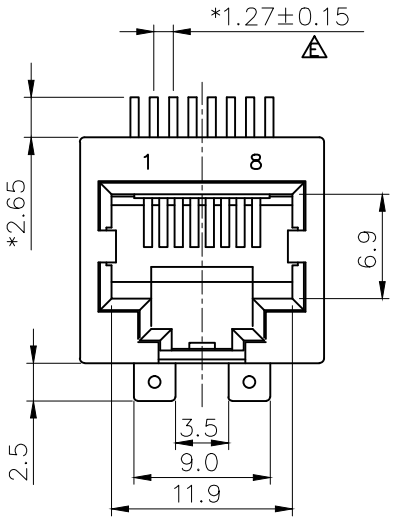

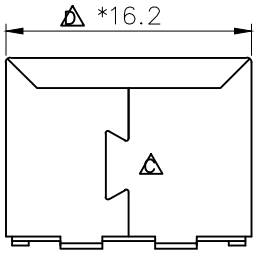

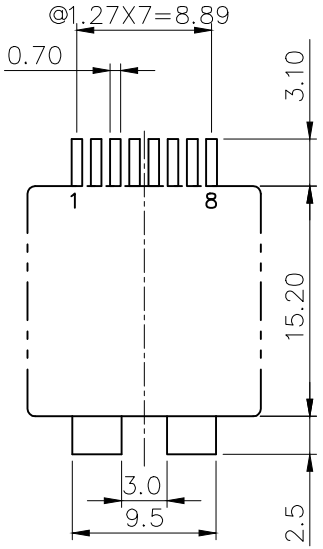

PCB LAYOUT
COMPONENT SIDE SHOWN

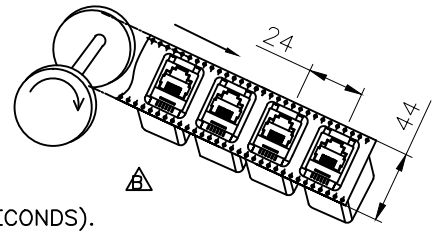

NOTES:

ELECTRICAL:
1. VOLTAGE RATING : 125 VAC.
2. CURRENT RATING : 1.5 AMP.
3. CONTACT RESISTANCE : 30 MILLIOHMS MAX.
4. INSULATION RESISTANCE: 1000 MEGOHMS MIN. @ 500 VDC.
5. DIELECTRIC STRENGTH : 1000 VAC 60Hz, 1MIN.

MECHANICAL:
1. HOUSING MATERIAL : HIGH TEMP. UL94V-0 BK.
2. INSERT : HIGH TEMP. UL94V-0 BK.
2. CONTACT MATERIAL : PHOSPHOR BRONZE t=0.35mm.
3. PLATING : GOLD PLATING OVER NICKEL.
4. OPERATING LIFE : 750 CYCLES MIN.
5. PCB RETENTION POST-SOLDER: 10 LBS MIN.

ENVIRONMENTAL:
1. STORAGE : -40°C TO +85°C.
2. OPERATION: -40°C TO +85°C.
3. IR REFLOW SOLDERING TEMPERATURE: 255°C TO 265°C (5~10 SECONDS).

△D MATES WITH MODULAR PLUG CONFORMING TO TIA-1096-A.

PART NUMBER: N311X-038-0X

X: 1- 3u" 2- 6u" 3-15u" 4-30u" 5-50u"

0X: 1-W/O MYLAR 2-W/MYLAR

MARK	ECN-NO.	REVISION RECORD	DRAWN	DATE
△E X1		新增SMT pitch尺寸1.27mm的公差	Joy	092822
△D X3		MODIFY DIM.	DORIS	091313'
△C X1		DRAWING MODIFY	EVA	022512
△B X4		NEW DESIGN	QUAN	020811'
△A X0	0000000	NEW DESIGN	QUAN	112911'

Contact Technology Co., Ltd.

UNLESS OTHERWISE SPECIFIED TOLERANCE: Dimension Range / Tolerance: X.X ±0.20; X.XX ±0.15; X.XXX ±0.10; ANGLE ±5°

SCALE 1/1 | UNIT mm | SIZE A3 | SHEET 1/1 | CHECKED | APPROVED

Material/Plated/Notes: SEE NOTE

NAME: TOP ENTRY 8P SMT JACK,W/SHIELD

Tooling No.:

PART NO.: SEE NOTE

REV.: E

DOC. NO.: NN310A038

Design drawing