RoHS ✓ THIS IS A RoHS COMPLIANT COMPONENT/ PRODUCT.

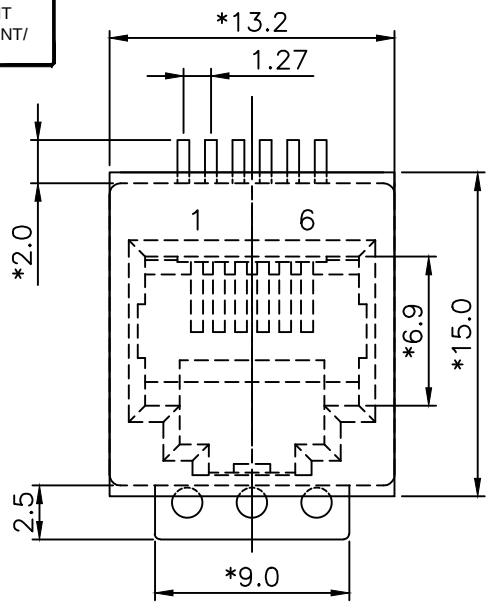

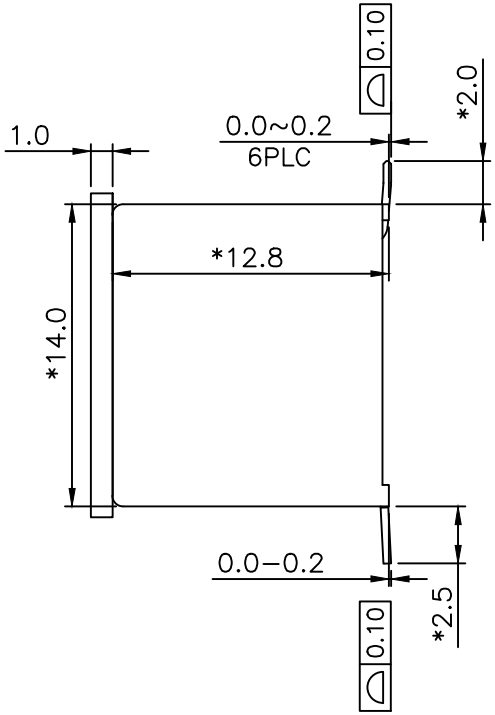

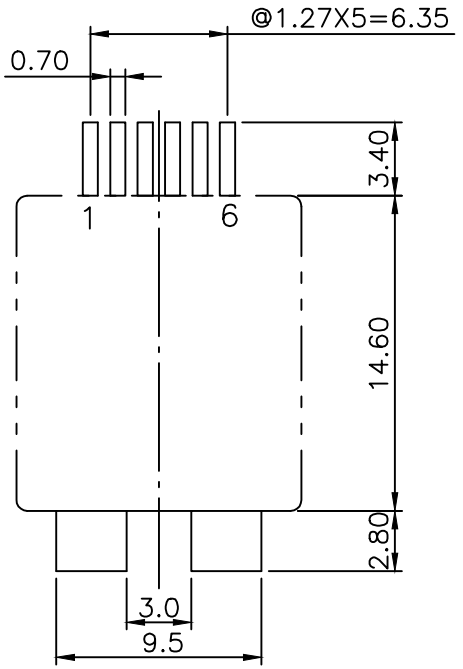

PCB LAYOUT
COMPONENT SIDE SHOWN

NOTES:

ELECTRICAL:
1. VOLTAGE RATING : 125 VAC RMS.
2. CURRENT RATING : 1.5 AMP.
3. CONTACT RESISTANCE : 30 MILLIOHMS MAX.
4. INSULATION RESISTANCE: 1000 MEGOHMS MIN. @ 500 VDC.
5. DIELECTRIC STRENGTH : 1000 VAC RMS 60Hz, 1MIN.

MECHANICAL:
1. HOUSING MATERIAL : HIGH TEMP. UL94V−0 PA9T BK.
2. INSERT : HIGH TEMP. UL94V−0 PA9T BK.
3. COVER SIZE : 13.2*15.0*1.0mm,HIGH TEMP BK.
4. CONTACT MATERIAL : PHOSPHOR BRONZE C5210EH t=0.35mm.
5. PLATING : GOLD PLATING OVER NICKEL.
6. OPERATING LIFE : 750 CYCLES MIN.
7. PCB RETENTION POST−SOLDER: 10 LBS MIN.

ENVIRONMENTAL:
1. STORAGE : −40°C TO +85°C.
2. OPERATION: − 0°C TO +70°C.
3. IR REFLOW SOLDERING TEMPERATURE: 255°C TO 265°C (5~10 SECONDS).

MATES WITH MODULAR PLUG CONFORMING TO TIA−1096−A.

PART NUMBER: WN311X−014−0X

1− 3u"

8−6P6C W/PLATE BK. WE
9−6P6C W/PLATE BK.

MARK	ECN-NO.	REVISION RECORD	DRAWN	DATE
X0	0000000	NEW DESIGN	Andy	080422

Contact Technology Co., Ltd.

UNLESS OTHERWISE SPECIFIED TOLERANCE

Dimension Range	Tolerance
X.X	±0.20
X.XX	±0.15
X.XXX	±0.10
ANGLE	±5°

SCALE 3/1 | UNIT mm | SIZE A3 | SHEET 2/2 | CHECKED | APPROVED

Material/Plated/Notes: SEE NOTE

NAME: TOP ENTRY 6P SMT H=12.8

Tooling No.

PART NO. SEE NOTE | REV. H

DOC. NO. WNN310A014

Design drawing