RoHS

THIS IS A RoHS COMPLIANT COMPONENT/ PRODUCT.

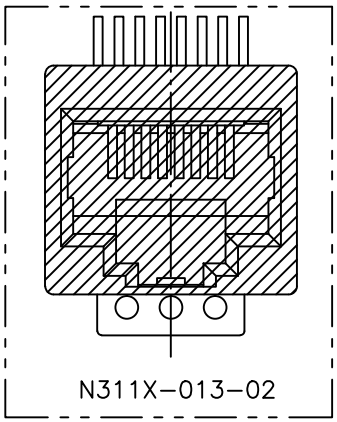

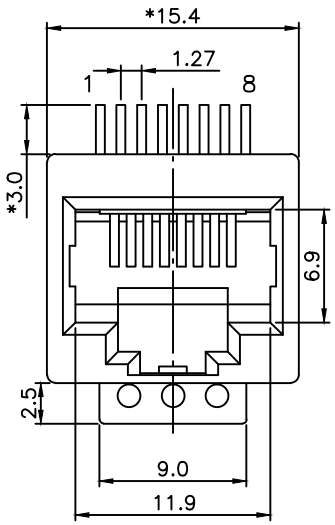

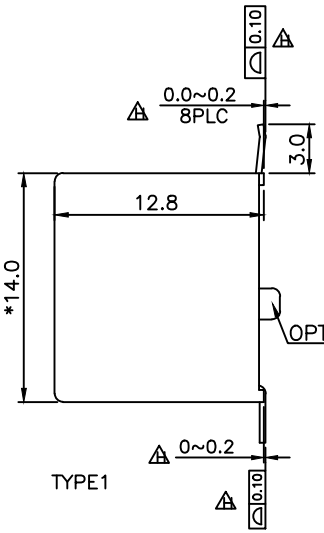

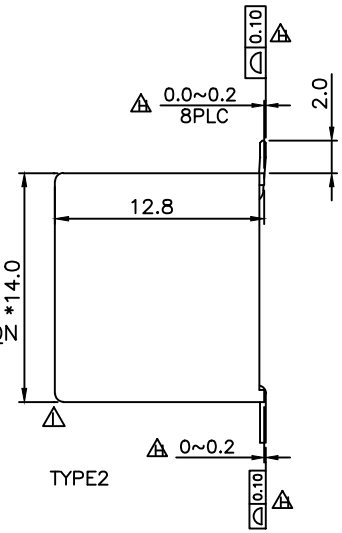

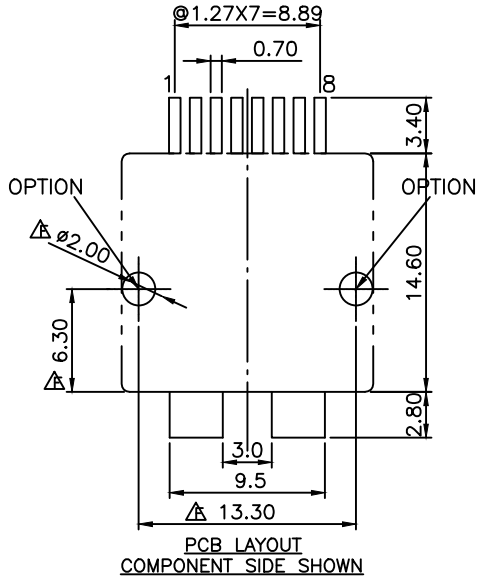

NOTES:

ELECTRICAL:

1. VOLTAGE RATING : 125 VAC.
2. CURRENT RATING : 1.5 AMP.
3. CONTACT RESISTANCE : 30 MILLIOHMS MAX.
4. INSULATION RESISTANCE: 1000 MEGOHMS MIN. @ 500 VDC.
5. DIELECTRIC STRENGTH : 1000 VAC 60Hz, 1MIN.

MECHANICAL:

1. HOUSING MATERIAL : HIGH TEMP. UL94V-0 BK.
2. INSERT : HIGH TEMP. UL94V-0 BK.
3. MYLAR SIZE : 20*16*0.06MM.
4. CONTACT MATERIAL : PHOSPHOR BRONZE t=0.35mm.
5. PLATING : GOLD PLATING OVER NICKEL.
6. OPERATING LIFE : 750 CYCLES MIN.
7. PCB RETENTION POST-SOLDER: 10 LBS MIN.

ENVIRONMENTAL:

1. STORAGE : -40°C TO +85°C.
2. OPERATION: -40°C TO +85°C.
3. IR REFLOW SOLDERING TEMPERATURE: 255°C TO 265°C (5~10 SECONDS).

MATES WITH MODULAR PLUG CONFORMING TO FCC PART 68, SUBPART F.

PART NUMBER: N311X-013-0X

1- 3u" 2- 6u"
3-15u" 4-30u"
5-50u" △6-10u"
7-Fu"

01-W/O MYLAR, W/O PLASTIC FEET TYPEI
△02-W/ MYLAR, W/O PLASTIC FEET TYPEI
△03-W/ MYLAR, W/ PLASTIC FEET TYPEI
△04-W/PLATE , W/O PLASTIC FEET TYPE2
△05-W/ MYLAR, W/O PLASTIC FEET TYPE2
△06-W/ MYLAR, W/ PLASTIC FEET TYPE2
07-W/ MYLAR, W/O PLASTIC FEET TYPE2

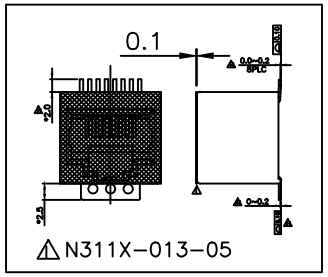

MARK	ECN-NO.	REVISION RECORD	DRAWN	DATE
△X0	0000000	NEW DESIGN	LINGER	041007
△X1		MODIFY DESIGN	YANG	010909
△X1		ADD NEW P/N	YANG	061509
△X1		ADD Plating P/N	PETER	110310'
△X3		UPDATE DIM	DORIS	113012'
△X4		ADD NEW P/N	Andy	042518'
△X3		ADD NEW P/N	Patrick	041018'
△X7		UPDATE DIMENSION	JOY	032719'
△X3		ADD NEW P/N	SOULE	062019'
△X3		ADD NEW P/N	SOULE	102419'
△X1		N311X-013-04 Plotted separately	Andy	042621'
△X1		ADD NEW P/N	Joy	060121'

Contact Technology Co., Ltd.

UNLESS OTHERWISE SPECIFIED TOLERANCE

Dimension Range	Tolerance
X.X	±0.20
X.XX	±0.15
X.XXX	±0.10
ANGLE	±5°

SCALE 1/1 | UNIT mm | SIZE A3 | SHEET 1/1

CHECKED | APPROVED

Material/Plated/Notes: SEE NOTE

NAME: TOP ENTRY 8P SMT H=12.8

Tooling No.:

PART NO.: SEE NOTE

REV.: L

DOC. NO.: NN310A013

Design drawing