RoHS

THIS IS A RoHS COMPLIANT COMPONENT/ PRODUCT.

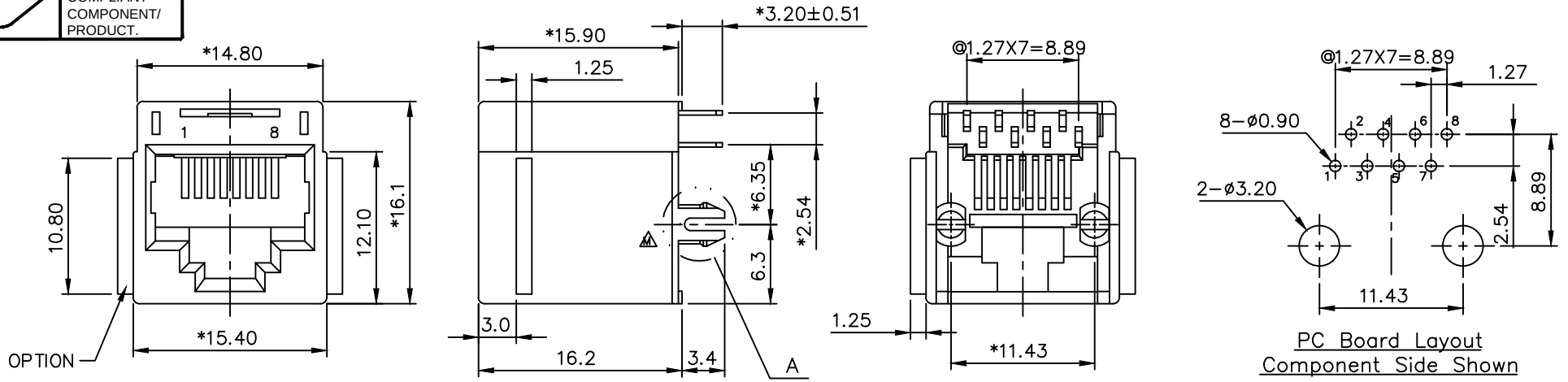

PC Board Layout
Component Side Shown

NOTES:

ELECTRICAL:

1. VOLTAGE RATING : 125 VAC.
2. CURRENT RATING : 1.5 AMP.
3. CONTACT RESISTANCE : 35 MILLIOHMS MAX.
4. INSULATION RESISTANCE :1000 MEGOHMS MIN. @ 500 VDC.
5. DIELECTRIC STRENGTH : 1000 VAC 60Hz, 1MIN.

MECHANICAL:

1. HOUSING MATERIAL : GLASS FILLED POLYESTER OR HIGH TEMP. UL94V−0 BK.
2. CONTACT MATERIAL : PHOSPHOR BRONZE t=0.35 mm.
3. PLATING : GOLD PLATING OVER NICKEL.
4. OPERATING LIFE : 1500 CYCLES MIN.
5. PCB RETENTION PRE−SOLDER : 1 LB MIN.
6. PCB RETENTION POST−SOLDER : 10 LBS MIN.

ENVIRONMENTAL:

1. STORAGE : −40°C TO +85°C.
2. OPERATION : −40°C TO +85°C.

MATES WITH MODULAR PLUG CONFORMING TO TIA−1096−A.

PART NUMBER : N311X−003−XX

△E 1−3u" 2−6u" 3−15u" 4−30u" 5−50u"

01−8P8C POLYESTER BK. W/PANEL STOP
02−8P8C HIGH TEMP. BK. W/PANEL STOP
03−8P8C POLYESTER BK. W/O PANEL STOP
04−8P8C HIGH TEMP. BK. W/O PANEL STOP
△B 05−8P8C HIGH TEMP. GREEN(347C) W/O PANEL STOP
06−8P8C HIGH TEMP. COOL GRAY(3U) W/O PANEL STOP
△D 07−8P8C HGH TEMP. BK. W/ PANEL STOP
08−8P8C HIGH TEMP. BK. W/O PANEL STOP
△E 09−8P8C HIGH TEMP. YELLOW(114C) W/O PANEL STOP
△H △G 10−8P2C HIGH TEMP. GRAY RAL 7040 PANEL STOP(4PIN&5PIN)
△H 11−8P8C HIGH TEMP. BLUE (285C) W/O PANEL STOP
△I 12−8P8C HIGH TEMP.(PA9T) BK. W/O PANEL STOP
△K 13−8P8C PBT. YL(114C). W/O PANEL STOP
△K 14−8P8C PBT. GY.(COOL GRAY 3U) W/O PANEL STOP
△L 15−8P6C(1,2,5,6,7,8) HIGH TEMP. COOL GRAY(3U) W/O PANEL STOP
△L 16−8P2C POLYESTER GRAY RAL 7040 PANEL STOP(4PIN&5PIN)
△N 17−8P8C POLYESTER BLUE(285C) W/O PANEL STOP
△A 18−8P4C(1,2,3,6PIN) POLYESTER YL 114C. W/PANEL STOP
△A 19−8P8C PBT YL 114C. W/PANEL STOP

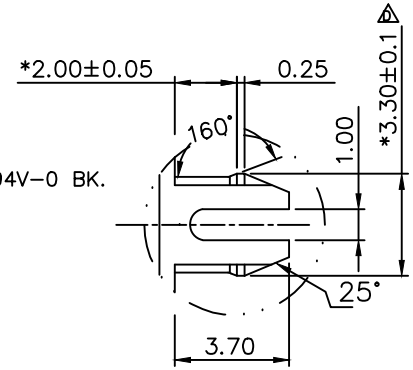

△A DETAIL A

MARK	ECN-NO.	REVISION RECORD	DRAWN	DATE
△X1		ADD NEW P/N	JAMES	051917'
△X1		ADD NEW P/N.	JOY	122716'
△X1		ADD NEW P/N.	Jacky	051515'
△X1		MODIFY DRAWING	KARL	103013'
△X2		ADD NEW P/N.	GRACE	103013'
△X2		ADD NEW P/N.	KARL	082313'
△X1		DESIGN MODIFY	ROCK	011013'
△X0	0000000	NEW DESIGN	Linger	060906

Contact Technology Co., Ltd.

UNLESS OTHERWISE SPECIFIED TOLERANCE

Dimension Range	Tolerance
X.X	±0.20
X.XX	±0.15
X.XXX	±0.10
ANGLE	±5°

SCALE 2.5/1 | UNIT mm | SIZE A3 | SHEET 1/1 | CHECKED | APPROVED

Material/Plated/Notes: SEE NOTE

NAME: RJ45 TOP ENTRY W/O SHIELD PCB JACK

Tooling No.

PART NO. SEE NOTE | REV. Q

DOC. NO. NN310A003

Design drawing