RoHS

THIS IS A RoHS COMPLIANT COMPONENT/ PRODUCT.

Reference Drawing

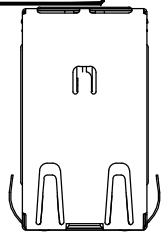

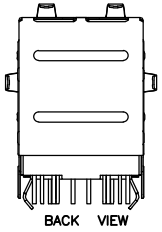

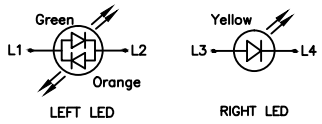

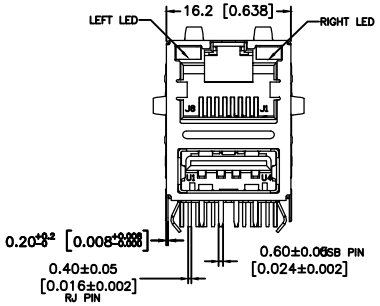

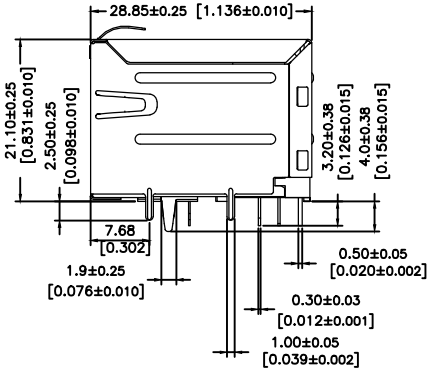

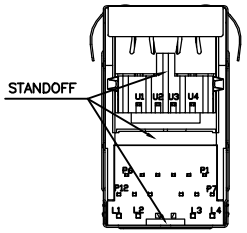

Schematic: GIGA

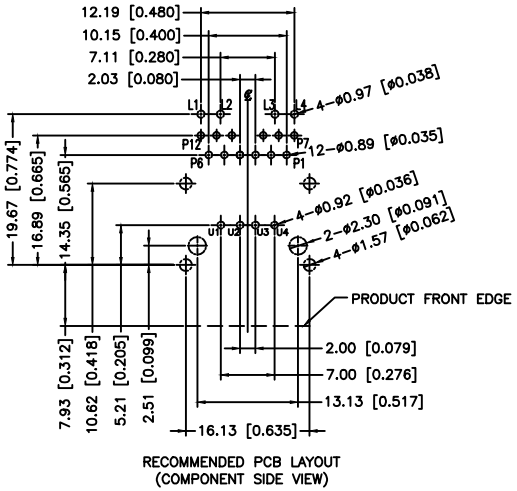

SCHEMATIC FOR RJ45:

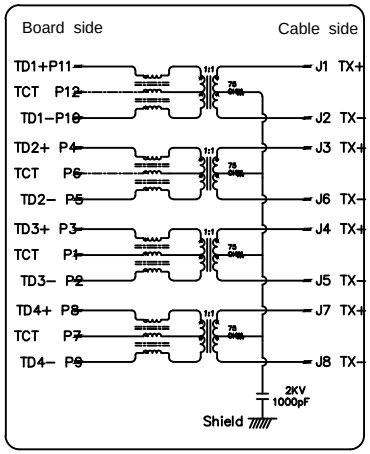

TYPE1

Notes:

Characteristics Description:

1. RJ45 1000 Base-Tx Transformer Jack With Transformer Impedance Resistor/High Voltage Capacitor.
2. Size Same As RJ-45 Modular Jack To Save PCB Space.
3. Reduce EMI Radiation, Improve EMI Performance.
4. Designed For Network Interface Card Application.
5. Designed To Meet IEEE 802.3u Requirement.
6. Designed For 1000 Base Transmission over UTP-5 Cable.

Electrical Specifications:

1. Inductance At 100 KHz, 100 mV 8mADC Bias: 350 uH Min.
2. Leakage Inductance 0.4 uH Max. @100KHz 100mV
3. Insertion Loss:1.1 dB Max. @ 1-100 MHz
4. Return Loss: 18dB Min. @ 1-30MHz
   16dB Min. @ 30-60MHz
   12dB Min. @ 60-80MHz
5. Cross Talk: 30dB Min. @ 1-100MHz
6. Common Mode Rejection: 30dB Min. @1-100MHz
7. Isolation @60Hz:1500Vrms(Input To Output) 60 Seconds

Mechanical:

1. Housing Material:Temperature BLACK UL94V-0
2. USB Housing Material:Temperature BLUE UL94V-0
3. Contact Mateial: Phosphor Bronze t=0.35mm.
4. Plating: Contact Area-Gold Plating.
5. Shield Material: Brass C2680 ,T=0.2mm

Environmental:

1.Storage :-40°C To +85°C.
2.Operation:-40°C To +85°C.
Mates With Modular Plug Conforming To TIA-1096-A

Part Number: K3TAX-163-XX

1-3u" 2-6u" 3-15u"
4-30u" 5-50u" 7-GOLD FLASH

XX:W/ TAB EMIHIGH TEMP ,BK.
TYPE1

MARK	ECN-NO.	REVISION RECORD	DRAWN	DATE
X0	0000000	NEW DESIGN	Joy	012522

Contact Technology Co., Ltd.

UNLESS OTHERWISE SPECIFIED TOLERANCE

Dimension Range	Tolerance
X.X	±0.20
X.XX	±0.15
X.XXX	±0.10
ANGLE	±5°

SCALE 1/1 | UNIT mm | SIZE A3 | SHEET 1/1 | CHECKED | APPROVED

Material/Plated/Notes: SEE NOTE

NAME: RJ45 ICM,1000BASE-T,LED OPTION

Tooling No.

PART NO. SEE NOTE | REV. 0

DOC. NO. KK3T0A163

Design drawing