RoHS ✓ THIS IS A RoHS COMPLIANT COMPONENT/ PRODUCT.

NOTE	A
K331X-017-01	3.30±0.50
K331X-017-02	
K331X-017-03	
K331X-017-04	
K331X-017-05	
K331X-017-06	
K331X-017-07	
K331X-017-08	
K331X-017- 12	
K331X-017-09	2.80±0.50
K331X-017-10	

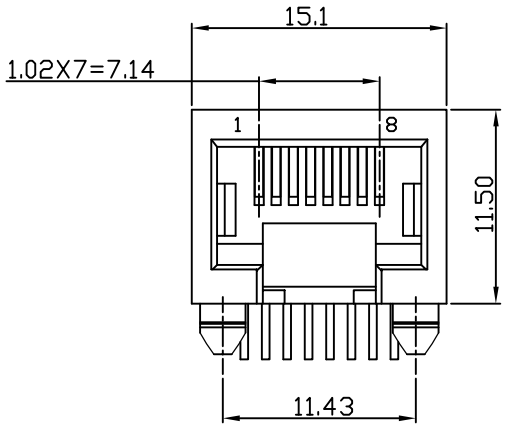

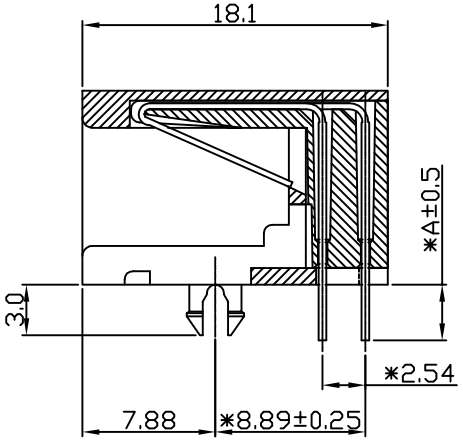

SECTION A-A

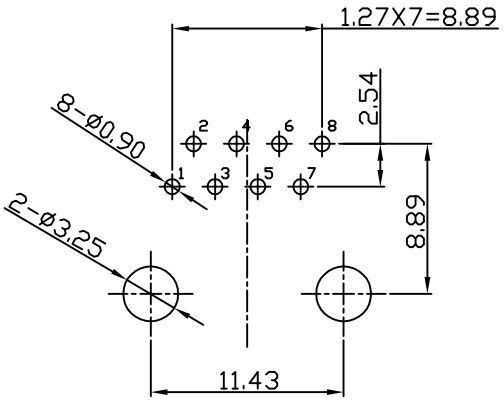

PC BOARD LAYOUT
COMPONENT SIDE SHOWN

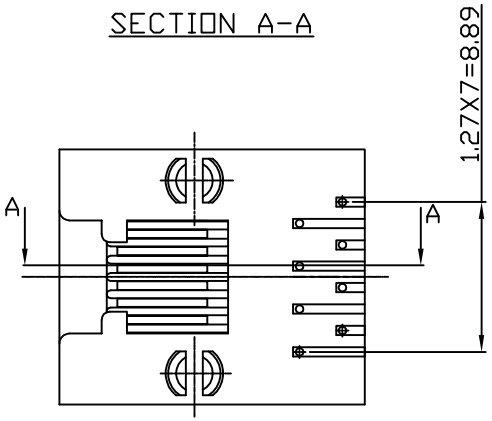

ELECTRICAL:
1. VOLTAGE RATING : 125 VAC.
2. CURRENT RATING : 1.5 AMP.
3. CONTACT RESISTANCE : 35 MILLIOHMS MAX.
4. INSULATION RESISTANCE : 1000 MEGOHMS MIN. @ 500 VDC.
5. DIELECTRIC STRENGTH : 1000 VAC 60Hz, 1MIN.

MECHANICAL:
1. HOUSING MATERIAL : GLASS FILLED POLYESTER OR HIGH TEMP. UL94V-0.
2. CONTACT MATERIAL : PHOSPHOR BRONZE ø=0.46mm.
3. PLATING : GOLD PLATING OVER NICKEL.
4. OPERATING LIFE : 750 CYCLES MIN.
5. PCB RETENTION PRE-SOLDER : 1 LB MIN.
6. PCB RETENTION POST-SOLDER : 10 LBS MIN.

ENVIRONMENTAL:
1. STORAGE : -40°C TO +85°C.
2. OPERATION : -40°C TO +85°C.

MATES WITH MODULAR PLUG CONFORMING TO IA-1096-A.

PART NUMBER : K331X-017-XX

1-3u" 2-6u"
3-15u" 4-30u" 5-50u"
7-GOLD FLASH
B-0.5 U"Min

01-POLYESTER BK
02-HIGH TEMP. BK
03-8P4C HIGH TEMP. BK
04-POLYESTER YL
05-POLYESTER GREEN
06-HIGH TEMP. YL
07-POLYESTER.BLUE(306U) 8P4C(1.2.3.6)
08-POLYESTER.BLUE(306U) 8P8C
△A 09: HIGH TEMP YL 114C 8P4C(1 、2、3、6PIN) FOR 1.0MM PCB THK
△A 10: HIGH TEMP BLUE(285C)(1,2,3,6PIN) FOR 1.0MM PCB THK
11-POLYESTER YL FOR 1.2MM PCB THK
12-PA10T.BK. 8P8C

MARK	ECN-NO.	REVISION RECORD	DRAWN	DATE
△1 X1		ADD NEW P/N	Grace	091117'
△ X1		ADD NEW P/N	JOY	052417
△A X2		ADD NEW P/N	JOY	021717
△A X0	0000000	NEW DESIGN	JOY	121015'

Contact Technology Co., Ltd.

UNLESS OTHERWISE SPECIFIED TOLERANCE

Dimension Range	Tolerance
X.X	±0.20
X.XX	±0.15
X.XXX	±0.10
ANGLE	±1°

SCALE 3/1 | UNIT mm | SIZE A3 | SHEET 1/1 | CHECKED | APPROVED

Material/Plated/Notes: SEE NOTE

NAME: 11.5 SIDE ENTRY 8P8C DIP TYPE

Tooling No.

PART NO. SEE NOTE

DOC. NO. KK330A017

REV. D

Design drawing